REVISIONS				
ZONE	REV.	DESCRIPTION	DATE	APPROVED

VIEW A

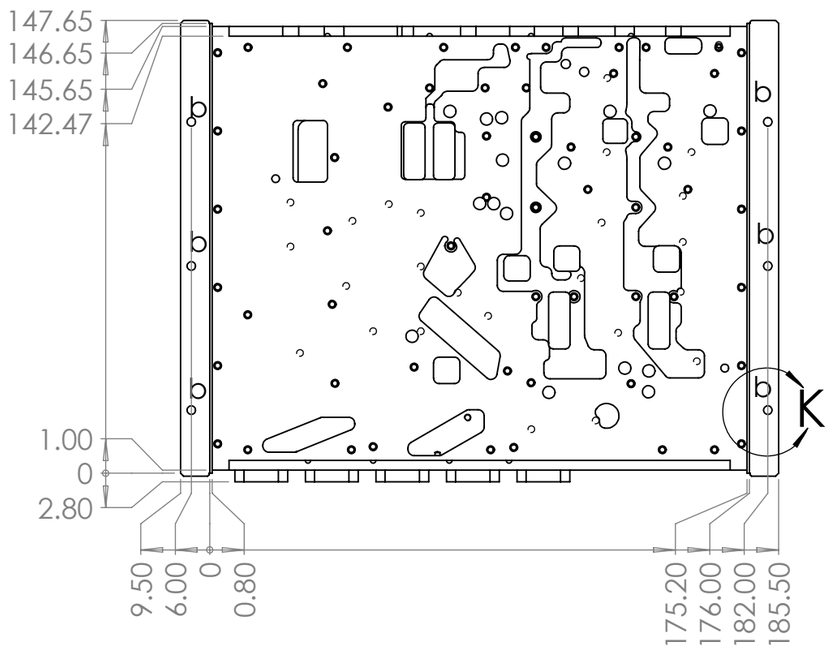

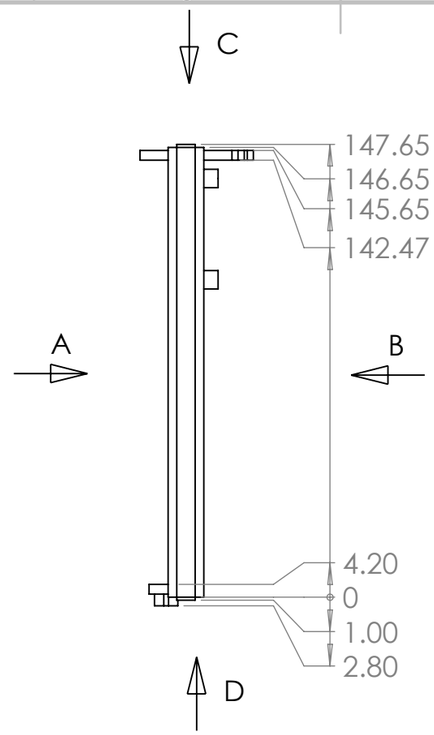

VIEW B

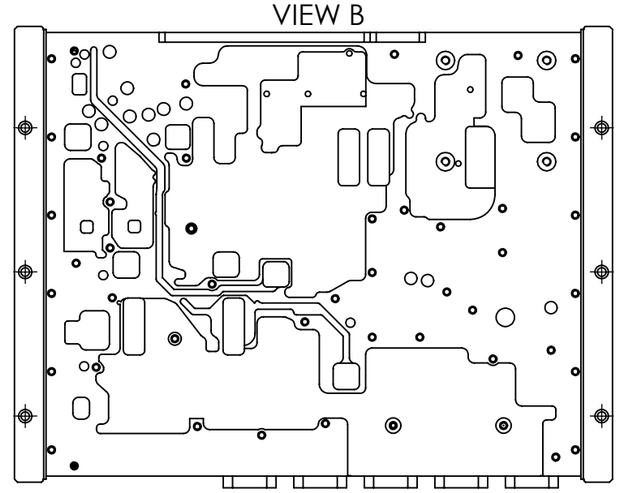

VIEW E

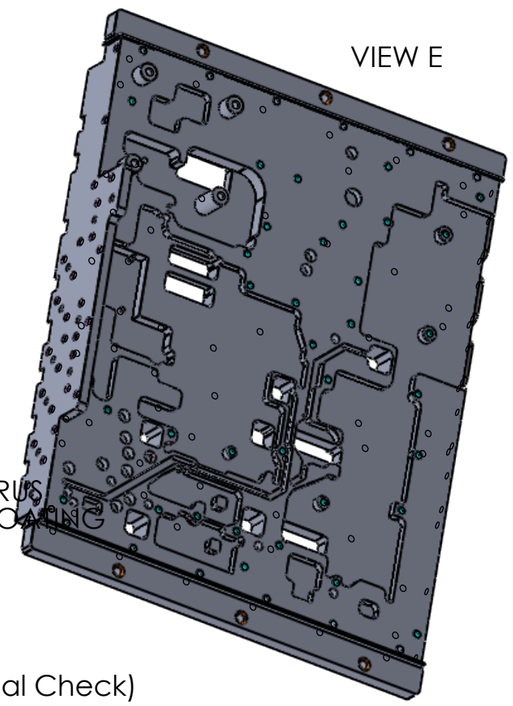

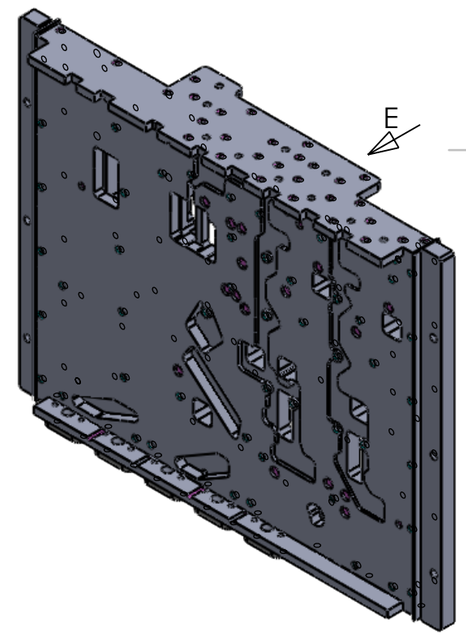

DRAFT

VIEW C

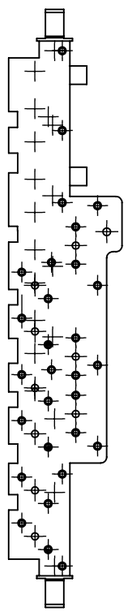

VIEW D

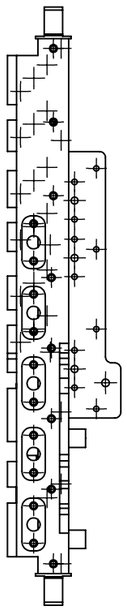

DETAIL K

SCALE 1 : 1

typ x6 "b"

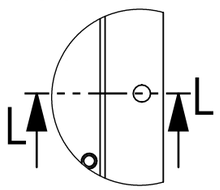

NOTES:

1 MATERIAL ALUM.6061-T6

2 SURFACE FINISH 63

3 PLATING : ELECTROLESS NICKEL MEDIUM PHOSPHORUS
ASTM B733 TYPE IV 10-15uM, AFTER COATING
HEAT TREATMENT 120-130 T 1HOUR
DO NOT PLATING THREADED AREAS
(THREADED AREAS)

4.For Check Dimension (Not Specified) Use Model
For Check Places For Screws-Use Screws (Functional Check)

SECTION L-L

SCALE 1 : 1

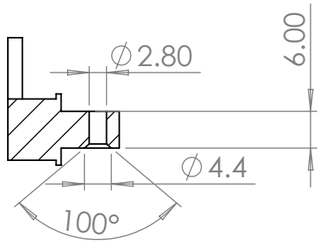

UNLESS OTHERWISE SPECIFIED: DIMENSIONS ARE IN MILLIMETERS SURFACE FINISH: TOLERANCES: LINEAR: ±0.1 ANGULAR: ±1°	FINISH: SEE NOTES			DEBURR AND BREAK SHARP EDGES	DO NOT SCALE DRAWING	REVISION A
	NAME	SIGNATURE	DATE		B.A. MICROWAVES LTD	
DRAWN	TA	ARKADI	15 02 26		TITLE: RFM BASE PANEL	
CHK'D	TA	ARKADI	15 02 26			
APPV'D	YR	YOSSI	15 02 26			
				MATERIAL: SEE NOTES	DWG NO. MECHBA1567-01	A3
				WEIGHT:	SCALE:1:2	SHEET 1 OF 5

REVISIONS				
ZONE	REV.	DESCRIPTION	DATE	APPROVED
-	-	See Sheet1	-	-

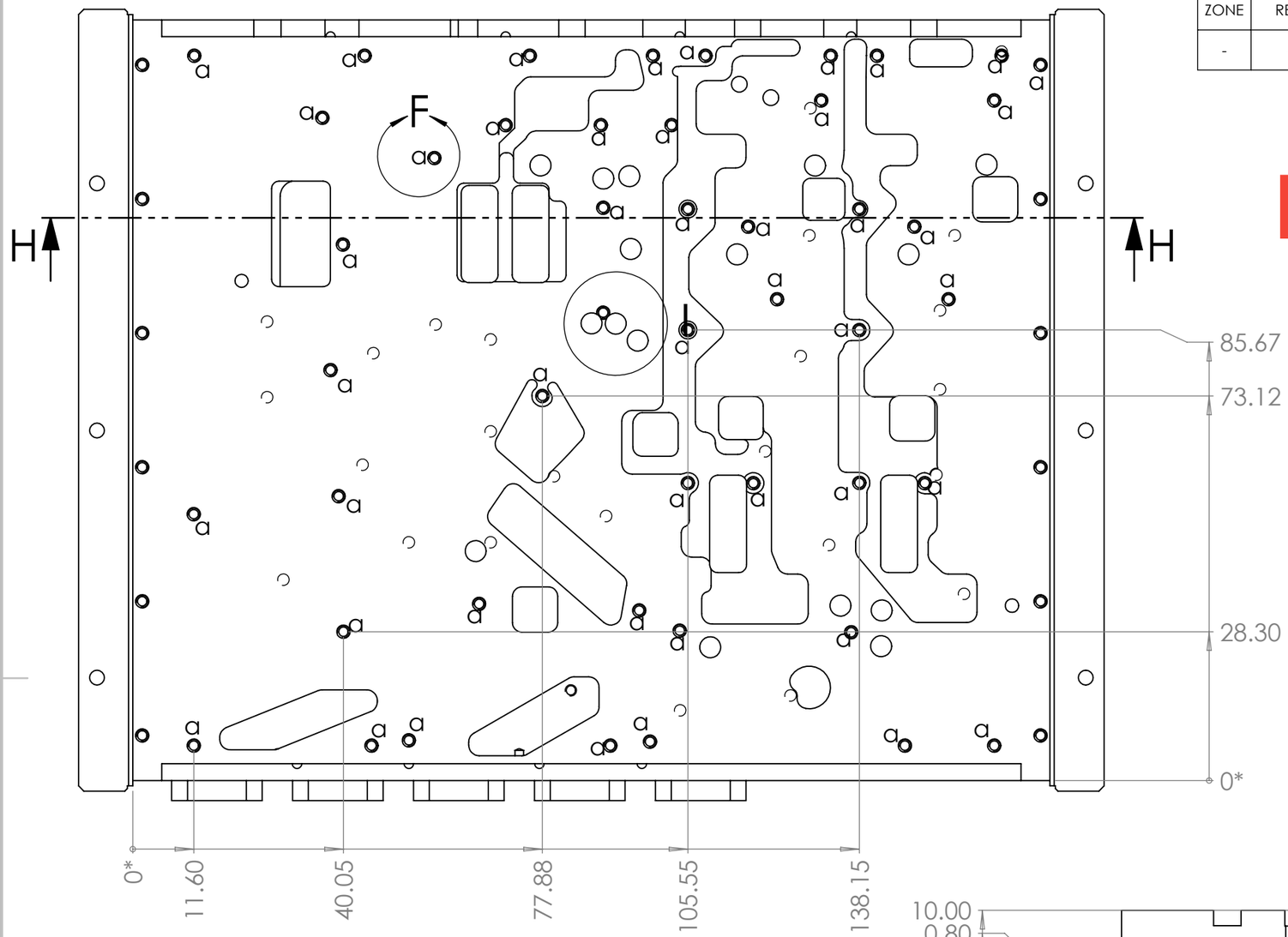

DRAFT

DETAIL I
SCALE 2 : 1

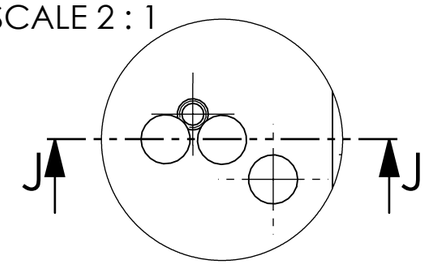

SECTION J-J
SCALE 2 : 1

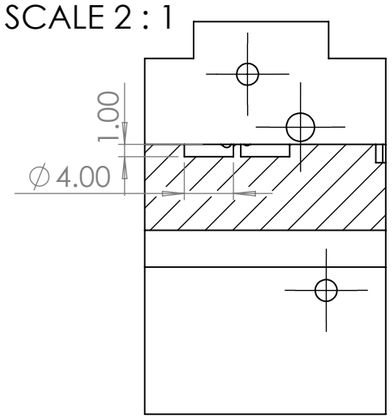

*The dimensions listed are for sample testing only.
To check all dimensions, use the 3D model.

SECTION H-H
SCALE 1 : 1

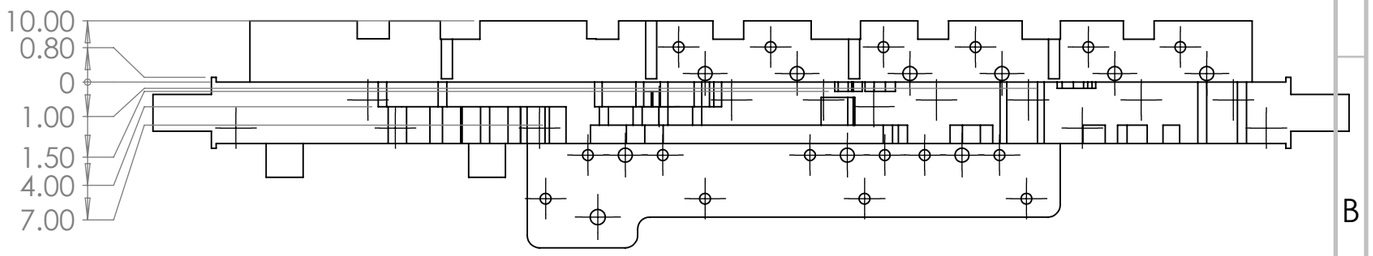

SECTION G-G
SCALE 2 : 1

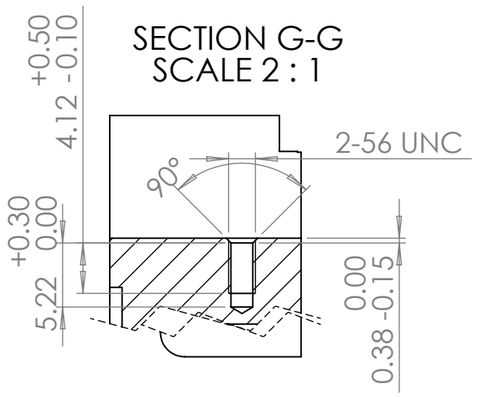

DETAIL F
SCALE 2 : 1 TYP FOR PLACE"A"

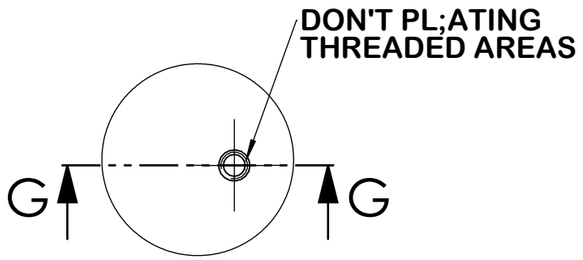

UNLESS OTHERWISE SPECIFIED: DIMENSIONS ARE IN MILLIMETERS SURFACE FINISH: TOLERANCES: LINEAR: ±0.1 ANGULAR: ±1°	FINISH:			DEBURR AND BREAK SHARP EDGES	DO NOT SCALE DRAWING	REVISION A
	NAME	SIGNATURE	DATE		B.A. MICROWAVES	
DRAWN	TA	ARKADI	15 02 26		TITLE: RFM BASE PANEL	
CHK'D	TA	ARKADI	15 02 26			
APPV'D	YR	YOSSI	15 02 26			
				MATERIAL:	DWG NO. MECHBA1567-01	A3
				WEIGHT:	SCALE:1:2	SHEET 2 OF 5

REVISIONS				
ZONE	REV.	DESCRIPTION	DATE	APPROVED
-	-	See Sheet1	-	-

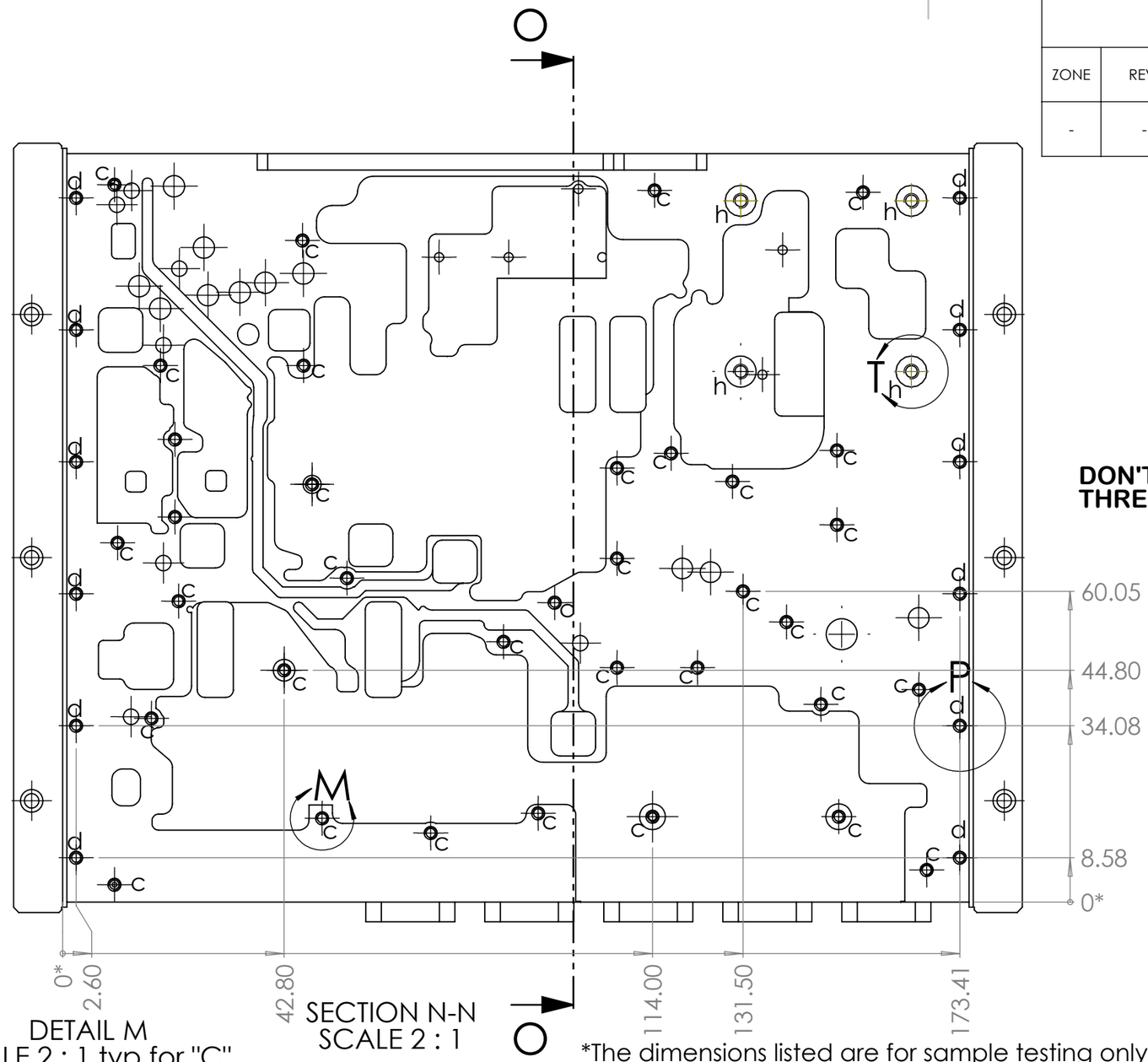

*The dimensions listed are for sample testing only.
To check all dimensions, use the 3D model.

DETAIL P
SCALE 2 : 1 for pl."d"

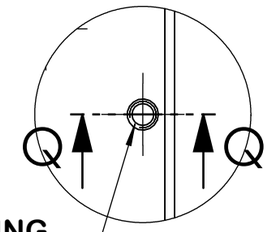

DON'T PLATING THREADED AREAS

SECTION O-O
SCALE 1 : 1

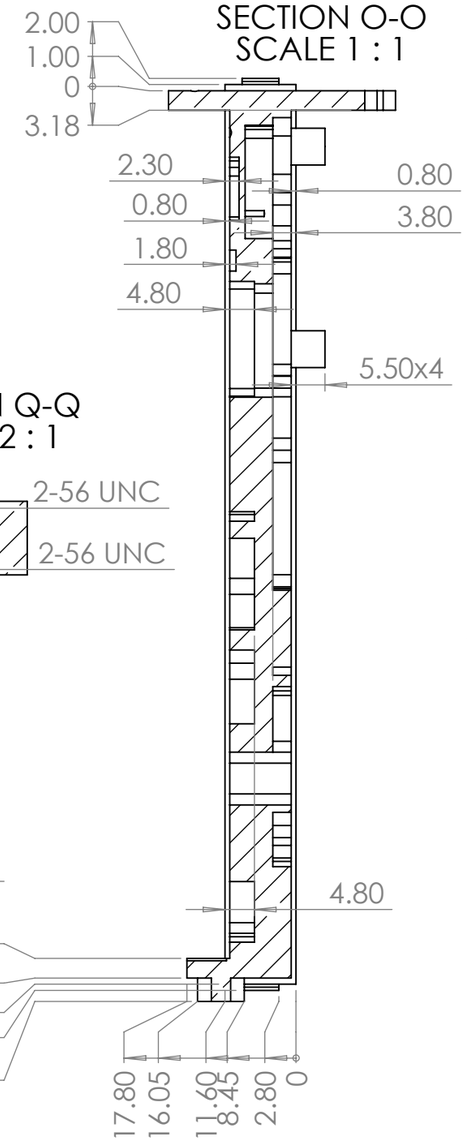

SECTION Q-Q
SCALE 2 : 1

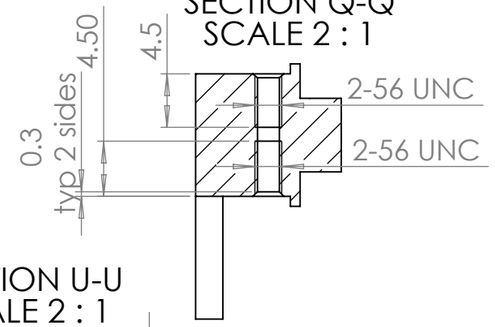

SECTION U-U
SCALE 2 : 1

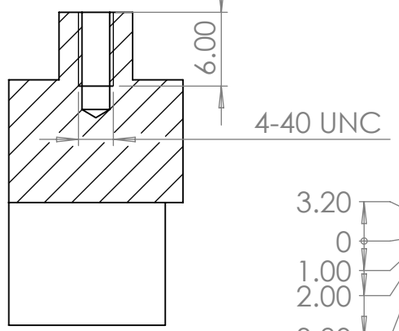

DETAIL M
SCALE 2 : 1 typ for "C"

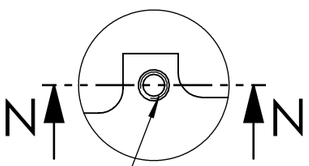

DON'T PLATING THREADED AREAS

SECTION N-N
SCALE 2 : 1

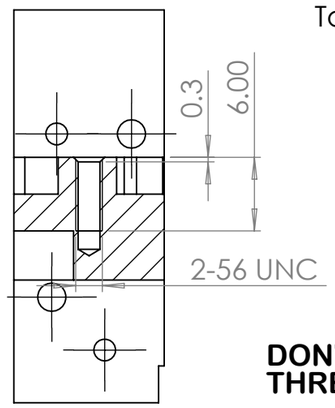

DETAIL"T"
SCALE 2 : 1
typ for places "h"

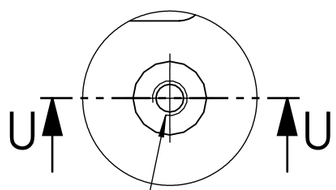

DON'T PLATING THREADED AREAS

UNLESS OTHERWISE SPECIFIED:
DIMENSIONS ARE IN MILLIMETERS
SURFACE FINISH:
TOLERANCES:
LINEAR: ±0.1
ANGULAR: ±1°

FINISH:

DEBURR AND BREAK SHARP EDGES

DO NOT SCALE DRAWING

REVISION A

	NAME	SIGNATURE	DATE
DRAWN	TA	ARKADI	15 02 26
CHK'D	TA	ARKADI	15 02 26
APPV'D	YR	YOSSI	15 02 26

B.A. MICROWAVES LTD

TITLE:

RFM BASE PANEL

DRAFT

DWG NO. MECHBA1567-01

A3

SCALE:1:2

SHEET 3 OF 5

REVISIONS				
ZONE	REV.	DESCRIPTION	DATE	APPROVED
-	-	See Sheet1	-	-

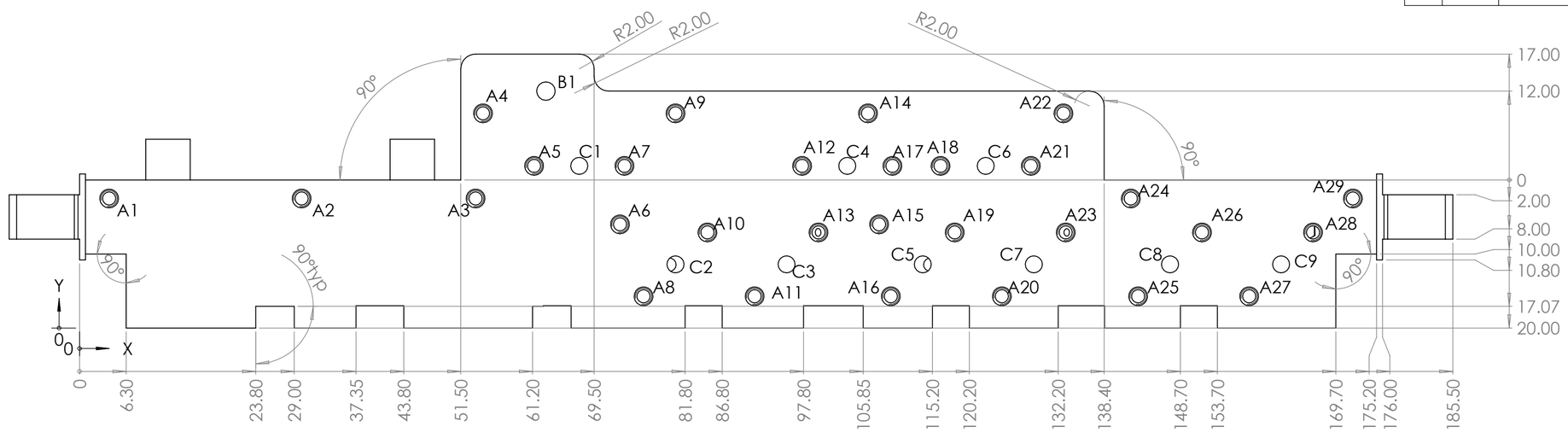

TAG	X LOC	Y LOC	SIZE
A1	4	17.50	∅ 1.78 ↧ 5.73 2-56 UNC - 2B ↧ 4.37 ⌵ ∅ 2.54 X 100°, Near Side
A2	30	17.50	∅ 1.78 ↧ 5.73 2-56 UNC - 2B ↧ 4.37 ⌵ ∅ 2.54 X 100°, Near Side
A3	53.50	17.50	∅ 1.78 ↧ 5.73 2-56 UNC - 2B ↧ 4.37 ⌵ ∅ 2.54 X 100°, Near Side
A4	54.50	29	∅ 1.78 ↧ 5.73 2-56 UNC - 2B ↧ 4.37 ⌵ ∅ 2.54 X 100°, Near Side
A5	61.40	21.90	∅ 1.78 ↧ 5.73 2-56 UNC - 2B ↧ 4.37 ⌵ ∅ 2.54 X 100°, Near Side
A6	73	14	∅ 1.78 ↧ 5.73 2-56 UNC - 2B ↧ 4.37 ⌵ ∅ 2.54 X 100°, Near Side
A7	73.60	21.90	∅ 1.78 ↧ 5.73 2-56 UNC - 2B ↧ 4.37 ⌵ ∅ 2.54 X 100°, Near Side
A8	76.19	4.29	∅ 1.78 ↧ 5.73 2-56 UNC - 2B ↧ 4.37 ⌵ ∅ 2.54 X 100°, Near Side
A9	80.50	29	∅ 1.78 ↧ 5.73 2-56 UNC - 2B ↧ 4.37 ⌵ ∅ 2.54 X 100°, Near Side
A10	84.81	12.91	∅ 1.78 ↧ 5.73 2-56 UNC - 2B ↧ 4.37 ⌵ ∅ 2.54 X 100°, Near Side
A11	91.19	4.29	∅ 1.78 ↧ 5.73 2-56 UNC - 2B ↧ 4.37 ⌵ ∅ 2.54 X 100°, Near Side

TAG	X LOC	Y LOC	SIZE
A12	97.60	21.90	∅ 1.78 ↧ 5.73 2-56 UNC - 2B ↧ 4.37 ⌵ ∅ 2.54 X 100°, Near Side
A13	99.81	12.91	∅ 1.78 ↧ 5.73 2-56 UNC - 2B ↧ 4.37 ⌵ ∅ 2.54 X 100°, Near Side
A14	106.50	29	∅ 1.78 ↧ 5.73 2-56 UNC - 2B ↧ 4.37 ⌵ ∅ 2.54 X 100°, Near Side
A15	108	14	∅ 1.78 ↧ 5.73 2-56 UNC - 2B ↧ 4.37 ⌵ ∅ 2.54 X 100°, Near Side
A16	109.59	4.29	∅ 1.78 ↧ 5.73 2-56 UNC - 2B ↧ 4.37 ⌵ ∅ 2.54 X 100°, Near Side
A17	109.80	21.90	∅ 1.78 ↧ 5.73 2-56 UNC - 2B ↧ 4.37 ⌵ ∅ 2.54 X 100°, Near Side
A18	116.30	21.90	∅ 1.78 ↧ 5.73 2-56 UNC - 2B ↧ 4.37 ⌵ ∅ 2.54 X 100°, Near Side
A19	118.21	12.91	∅ 1.78 ↧ 5.73 2-56 UNC - 2B ↧ 4.37 ⌵ ∅ 2.54 X 100°, Near Side
A20	124.59	4.29	∅ 1.78 ↧ 5.73 2-56 UNC - 2B ↧ 4.37 ⌵ ∅ 2.54 X 100°, Near Side
A21	128.50	21.90	∅ 1.78 ↧ 5.73 2-56 UNC - 2B ↧ 4.37 ⌵ ∅ 2.54 X 100°, Near Side
A22	132.90	29	∅ 1.78 ↧ 5.73 2-56 UNC - 2B ↧ 4.37 ⌵ ∅ 2.54 X 100°, Near Side
A23	133.21	12.91	∅ 1.78 ↧ 5.73 2-56 UNC - 2B ↧ 4.37 ⌵ ∅ 2.54 X 100°, Near Side
A24	142	17.50	∅ 1.78 ↧ 5.73 2-56 UNC - 2B ↧ 4.37 ⌵ ∅ 2.54 X 100°, Near Side
A25	142.99	4.29	∅ 1.78 ↧ 5.73 2-56 UNC - 2B ↧ 4.37 ⌵ ∅ 2.54 X 100°, Near Side
A26	151.61	12.91	∅ 1.78 ↧ 5.73 2-56 UNC - 2B ↧ 4.37 ⌵ ∅ 2.54 X 100°, Near Side

DON'T PLATING
THREADED AREAS- "A1-...-A29" PLACES FOR UNC2-56

TAG	X LOC	Y LOC	SIZE
A27	157.99	4.29	∅ 1.78 ↧ 5.73 2-56 UNC - 2B ↧ 4.37 ⌵ ∅ 2.54 X 100°, Near Side
A28	166.61	12.91	∅ 1.78 ↧ 5.73 2-56 UNC - 2B ↧ 4.37 ⌵ ∅ 2.54 X 100°, Near Side
A29	172	17.50	∅ 1.78 ↧ 5.73 2-56 UNC - 2B ↧ 4.37 ⌵ ∅ 2.54 X 100°, Near Side
B1	63	32	∅2.50 THRU
C1	67.50	21.90	∅2.30 THRU
C2	80.50	8.60	∅2.30 THRU
C3	95.50	8.60	∅2.30 THRU
C4	103.70	21.90	∅2.30 THRU
C5	113.90	8.60	∅2.30 THRU
C6	122.40	21.90	∅2.30 THRU
C7	128.90	8.60	∅2.30 THRU
C8	147.30	8.60	∅2.30 THRU
C9	162.30	8.60	∅2.30 THRU

DRAFT

UNLESS OTHERWISE SPECIFIED:
DIMENSIONS ARE IN MILLIMETERS
SURFACE FINISH:
TOLERANCES:
LINEAR: ±0.1
ANGULAR: ±1°

FINISH:

DEBURR AND BREAK SHARP EDGES

DO NOT SCALE DRAWING

REVISION A

B.A. MICROWAVES Ltd

	NAME	SIGNATURE	DATE
DRAWN	TA	ARKADI	15 02 26
CHK'D	TA	ARKADI	15 02 26
APP'V'D	YR	YOSSI	15 02 26

TITLE:
RFM BASE PANEL

MATERIAL:

WEIGHT:

DWG NO. MECHBA1567-01

A2

SCALE:1:2

SHEET 4 OF 5

REVISIONS				
ZONE	REV.	DESCRIPTION	DATE	APPROVED
-	-	See Sheet1	-	-

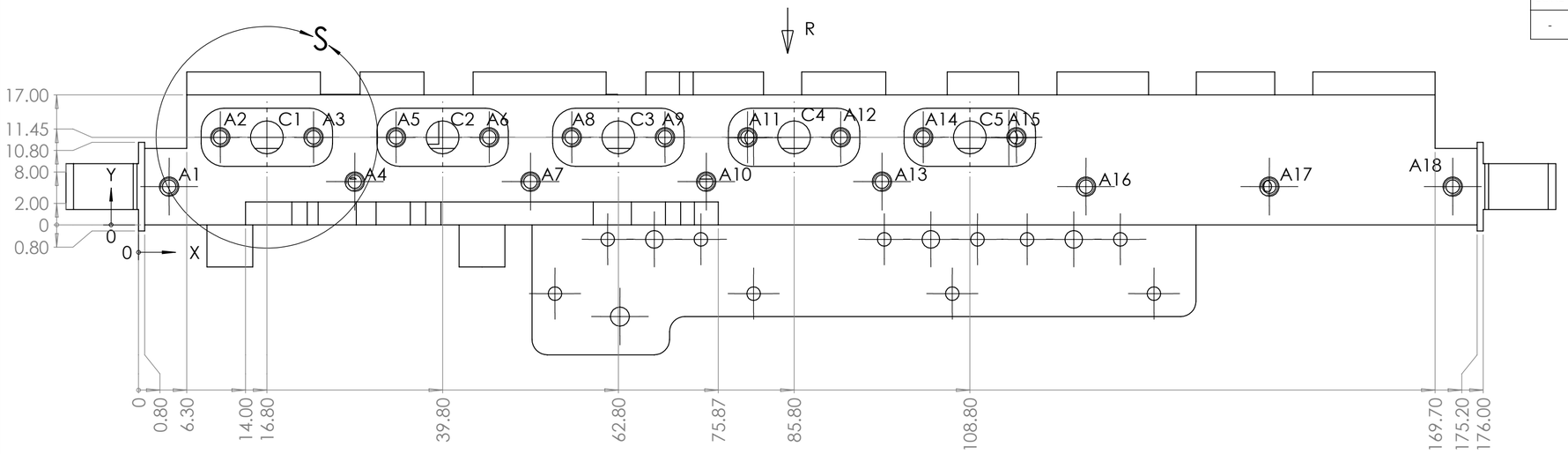

VIEW R
SCALE 2 : 1

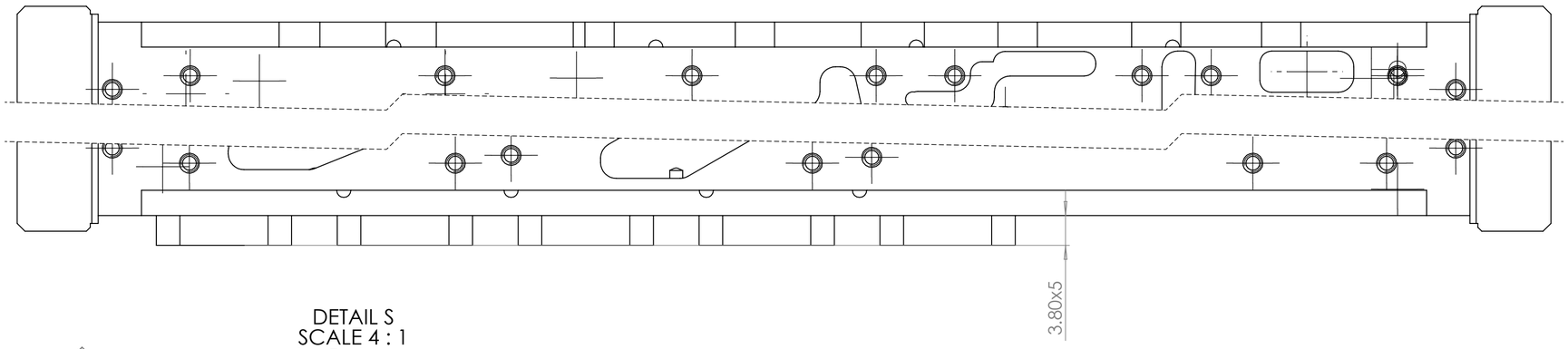

DETAIL S
SCALE 4 : 1
for 5 places

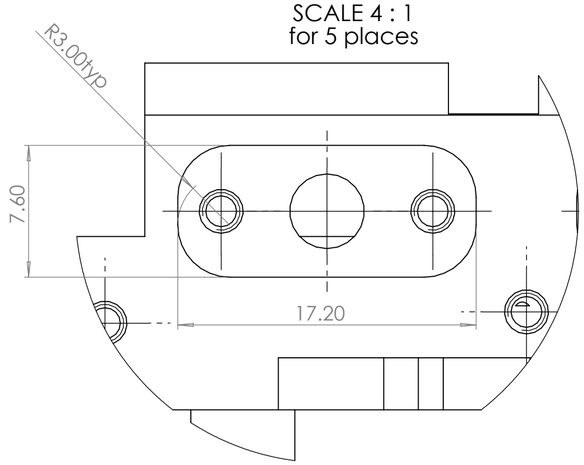

TAG	X LOC	Y LOC	SIZE
C1	16.80	11.45	∅4.30↧7.00
C2	39.80	11.45	
C3	62.80	11.45	
C4	85.80	11.45	
C5	108.80	11.45	

TAG	X LOC	Y LOC	SIZE
A1	4	5	∅ 1.78 ↧ 5.73 2-56 UNC - 2B ↧ 4.37 ⌵ ∅ 2.54 X 100°, Near Side
A2	10.70	11.45	
A3	22.90	11.45	
A4	28.30	5.65	
A5	33.70	11.45	
A6	45.90	11.45	
A7	51.30	5.65	
A8	56.70	11.45	
A9	68.90	11.45	
A10	74.30	5.65	
A11	79.70	11.45	
A12	91.90	11.45	
A13	97.30	5.65	
A14	102.70	11.45	
A15	114.90	11.45	
A16	124	5	
A17	148	5	
A18	172	5	

DON'T PLATING
THREADED AREAS- "A1-...-A18" PLACES FOR UNC2-56

DRAFT

UNLESS OTHERWISE SPECIFIED:
DIMENSIONS ARE IN MILLIMETERS
SURFACE FINISH:
TOLERANCES:
LINEAR: ±0.1
ANGULAR: ±1°

FINISH:

DEBURR AND BREAK SHARP EDGES

DO NOT SCALE DRAWING

REVISION A

B.A. MICROWAVES LTD

	NAME	SIGNATURE	DATE
DRAWN	TA	ARKADI	15 02 26
CHK'D	TA	ARKADI	15 02 26
APPV'D	YR	YOSSI	15 02 26

TITLE:
RFM BASE PANEL

MATERIAL:

WEIGHT:

DWG NO.
MECHBA1567-01

A2

SCALE:1:2

SHEET 5 OF 5